Stormtech™

ARCHITECTURAL
GRATES + DRAINS

THE ORIGINAL LINEAR DRAIN THE ORIGINAL

SD90

Slot Drain

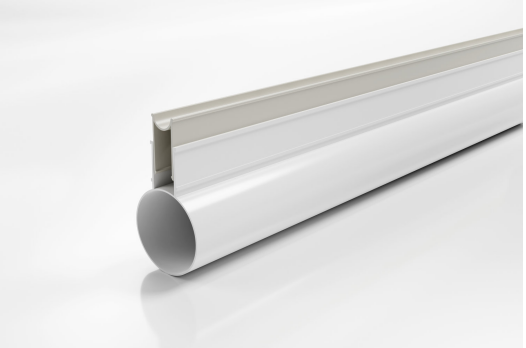

Code SD90
Range Slot Drain
Category Modular Kits
Channel Material uPVC

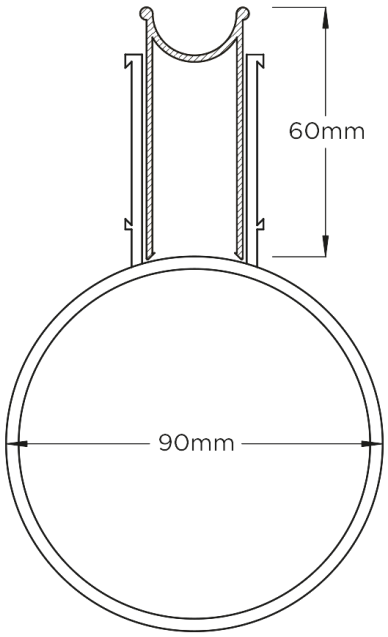

Grates longer than 1500mm supplied in sections. Tile Inserts longer than 1200mm supplied in sections. Channels over 3000mm supplied in sections with joiner. +/-2mm tolerance on dimensions.

90mm Slot Drain with UPVC Beige Insert

The SD90 Slot Drain features a 25mm opening on the top with 20 slots draining into a concealed 90mm drain pipe with UPVC beige insert.

The Slot Drain can be completed with a 30mm wide architectural wedge-wire grate as an optional item.

Please note the insert comes without holes

SPECIFICATIONS + DIMENSIONS

Channel Width	25mm
Channel Depth	Adjustable
Length(s)	3030mm
Outlet Size	N/A

PRODUCT APPLICATIONS

Commercial Drainage
Courtyard / Patio Drainage
Driveway Drainage
Paved Area Drainage

Copyright © Stormtech Pty Ltd. Patent 733361. Drawings not to scale, please use dimensions shown.
Downloaded 29/11/2026 (please check for updates)